A rcWSC

AFFIDAVIT

THE STATE OF TEXAS §

§

COUNTY OF MCLENNAN §

BEFORE ME, the undersigned authority, on this day personally appeared Susan Mazanec, who being duly sworn, upon oath deposes and says:

"My name is Susan Mazanec. I am over 18 years of age, competent to make this affidavit, and am familiar with the facts herein stated and believe them to be true.

I have complied with the requirements of the Southern Trinity Groundwater Conservation District's Rules to provide notification by first class mail to landowners, well owners and well operators within one half-mile of the well or wells for which I or the entity I represent seek(s) a Historic Use Production Permit. Such notification was made not less than 10 days before the public hearing scheduled to consider the application for a Historic Use Production Permit **HUPP-2010-030**."

Susan Mazanec

Affiant

Sworn to and subscribed before me on this 22 day of Sept., 2010.

Candice Ayres

Notary Public in and for the State of Texas

NOTARY PUBLIC STATE OF TEXAS

CANDICE AYRES
Notary Public
STATE OF TEXAS
My Comm. Exp. February 15, 2012

Permit Number: HUPP-2010-030

SOUTHERN TRINITY GROUNDWATER CONSERVATION DISTRICT
COUNTY OF MCLENNAN, STATE OF TEXAS

HISTORIC USE PRODUCTION PERMIT

THIS CERTIFIES THAT: Pure Water Supply Corporation
P.O. Box 154414
Waco, Texas 76715
Phone: 254-412-1511

(the "Permittee"), has applied for an Historic Use Production Permit to withdraw and place to beneficial use groundwater from within the District, and that the Board of Directors of the Southern Trinity Groundwater Conservation District ("District") has APPROVED the application as follows:

1 Permit Category

This permit is a **Historic Use Production Permit.**

2 Permit Term

The term of this permit is **perpetual.**

3 Groundwater Source

The source of groundwater is the **Trinity Aquifer.**

4 Annual Groundwater Withdrawal Amounts

Permittee may withdraw groundwater from the Trinity Aquifer for beneficial, nonwasteful use in a manner not to exceed the following volume: **84.4251 acre-feet per calendar year.** This groundwater withdrawal amount has been calculated pursuant to Section 5.211 of the District's rules. It may be subject to proportional adjustment pursuant to Chapter 5, Subchapter B of the District's rules, as may be amended.

5 Purpose of Use

Permittee may use Trinity Aquifer groundwater only for **municipal purposes.**

6 Well Name(s), Location(s), and Maximum Rate of Withdrawal

Groundwater may only be withdrawn from the aquifer from a well(s) located at each of the location(s) and with a maximum rate of withdrawal(s) (flow rate) as follows:

Name	Location (latitude/longitude)	Maximum Flow Rate
Well # 1	N31D 40M 03S / W97D 04M 59S	187
Well # 2	N31D 39M 41S / W97D 03M 32S	265

SOUTHERN TRINITY GROUNDWATER CONSERVATION DISTRICT
COUNTY OF MCLENNAN, STATE OF TEXAS

7 Measurement of Amount of Groundwater Withdrawn

Permittee may only withdraw groundwater from a well that has an operating flow meter that meets the requirements of Chapter 8 of the District's rules.

8 Place of Use

Permittee may beneficially use Aquifer groundwater only within the Permittee's wholesale or retail water service area identified in the Certificate of Convenience and Necessity 10036, filed with the Texas Commission on Environmental Quality. Except as provided by 5.401(b) of the District's rules, as may be amended, if the place of use is not within the District's boundaries, Permittee must obtain a groundwater exportation permit from the District prior to the withdrawal of groundwater under the permit.

9 Well Construction, Operation, Maintenance, Closure

The well(s) identified in this permit shall be installed, equipped, operated, maintained, plugged, capped, or closed, as may be appropriate in accordance with the District's rules and all other applicable federal, state, and local laws, including by submitting a copy of a state plugging report to the District within 60 days after capping or plugging any well.

10 Water Conservation

Withdrawals of groundwater are required to be efficiently withdrawn and used in compliance with the District's rules and the District's water conservation plan, as may be amended, and Permittee's plan as approved by the District, as may be applicable.

11 Conveyance to Place of Use

Water authorized by this permit to be produced must be conveyed to the place of use in a manner to prevent evaporation, channel loss by percolation, or waste. Water conveyed greater than a distance of one-half mile from the wellhead where produced must be conveyed through a pipeline.

12 Meters; Alternative Measuring Method

Permittee shall install, operate and maintain the meter or alternative measuring method on the well(s) identified in this permit in compliance with the District's rules and the manufacturer's instructions.

13 Reports

Permittee shall timely file all applicable reports with the District on forms prescribed by the District as required by the District's rules, as may be amended, and other applicable law.

14 Fees

Permittee shall timely pay and remain current on the payment of all applicable fees to the District.

SOUTHERN TRINITY GROUNDWATER CONSERVATION DISTRICT
COUNTY OF MCLENNAN, STATE OF TEXAS

15 Interruption, Suspension, or Other Limitations Due to Drought

Permittee shall reduce water supply and consumption during times of drought in accordance with the District's rules and the District's management plan and Permittee's plan approved by the District, as applicable.

16 Groundwater Management Plan

Permittee shall withdraw and use groundwater only in accordance with the District's approved groundwater management plan, as may be amended.

17 Water Quality

Permittee shall use diligence to protect the water quality of groundwater in the District and shall comply with the District's water quality rules and take no action that pollutes or contributes to the pollution of groundwater in the District.

18 Transfers and Amendments

Permittee may transfer or amend this permit only in compliance with the District's rules.

19 Permit Review, Renewal or Extension Conditions

Permittee is subject to any review, renewal or extension conditions stated in the permit or the District's rules.

20 Change of Name, Address or Telephone Number

Permittee shall provide written notice to the District of any change of ownership, name of Permittee or the authorized representative, well operator, mailing address or telephone number within 30 days of such change.

21 Inspections by District

Any authorized officer, employee, agent or representative of the District shall have the right at all reasonable times to enter upon lands upon which a well may be located within the boundaries of the District, including the well(s) identified in Paragraph 6 of this permit, for the purpose of inspecting or testing such wells, meters, pumps and the power units of a well or wells, collecting water samples, and making any other reasonable and necessary inspections and tests that may be required or necessary for the formulation or the enforcement of the permits, rules or orders of the District. Permittee has a duty to ensure that the well site is accessible to District representatives for inspection and to cooperate fully in any reasonable inspection of the well(s) and well site by District representatives.

22 Additional Conditions

This permit is issued subject to the requirements of: (1) Chapter 8821, Texas Special District Local Laws Code; (2) Chapter 36, Texas Water Code, as may be amended; and (3) the District's Rules, as may be amended.

23 Enforcement

The District retains the right to take any and all enforcement actions within its legal authority to enforce compliance with the terms and conditions of this permit.

24 Continuing Jurisdiction of District

This permit is issued subject to the continuing jurisdiction of and supervision by the District, and may be amended from time to time consistent with applicable law, including if the District learns that any of the information set forth in this permit is incorrect on the date issued.

25 Permit Recordation

Within 30 days of the date of issuance of this approved permit from the District, Permittee shall record this permit with the County Clerk of every county in which the well(s) or place of use are located and provide a copy of the recorded permit to the District.

26 References to Law

Any reference in this permit to a statute, rule, or other law of any kind, that exists on the date of issuance of the permit includes all subsequent amendments and additions thereto.

27 Other Matters Denied

All other matters requested in Permittee's application that are not specifically granted by this permit are denied.

SOUTHERN TRINITY GROUNDWATER CONSERVATION DISTRICT
COUNTY OF MCLENNAN, STATE OF TEXAS

THIS PERMIT IS ISSUED, EXECUTED THIS 6th day of October, 2010, by the Board of Directors of the Southern Trinity Groundwater Conservation District.

Rodney Kroll,
President, Board of Directors

ATTEST:

Glen Thurman
Secretary, Board of Directors

ACKNOWLEDGMENT

STATE OF TEXAS)
COUNTY OF MCLENNAN)

ON BEHALF OF THE DISTRICT, THIS PERMIT WAS ACKNOWLEDGED before me on October 6, 2010, by Rodney Kroll, President, Board of Directors, Southern Trinity Groundwater Conservation District, a groundwater conservation district created pursuant to Article XVI, Section 59, Texas Constitution.

Notary Public in and for the State of Texas

TRICIA LAW
MY COMMISSION EXPIRES
February 4, 2012

AFTER RECORDING RETURN TO:

Tricia Law, General Manager
Southern Trinity Groundwater Conservation District
P. O. Box 2205
420 North 6th Street
Waco, Texas 76703

FILED AND RECORDED
OFFICIAL PUBLIC RECORDS

J.A. Andy Harwell

October 15, 2010 11:17:40 AM

FEE: $27.00 2010032270

J.A. "Andy" Harwell County Clerk
Mclennan County TEXAS

Southern Trinity Groundwater Conservation District
P. O. Box 2205
Waco, Texas 76703
Phone 254 759-5610 Fax 254 754-9480 e-mail southerntrinitygcd@att.net

Notice of Administrative Completeness for
For Historic Use Production Permit (HUPP) Application, Technical Summary, and General Manager's Proposed Action on Historic Use Production Permit Application

September 20, 2010

Pure Water Supply Corporation
P.O. Box 154414
Waco, Texas, 76715

RE: Application No. HUPP-2010-030

Please be advised that the Southern Trinity Groundwater Conservation District (the "District") received your Historic Use Production Permit Application. Pursuant to §9.207 of the District's Rules, the District's General Manager has reviewed your application and has determined that the application is administratively complete. The General Manager has conducted a technical review of the application and will recommend to the District's Board of Directors that it consider issuing the Historical Use Production Permit for an annual production of groundwater not to exceed 84.4251 acre-feet. Attached to this letter is a copy of the Technical Summary, the proposed draft permit, and notice of the permit hearing date and location.

Also attached to this letter is a list of names, if any were found by the District, of well owners that may own a well or wells in the Trinity Aquifer that are located within ½ mile radius of the well or wells that you listed in your HUPP application. This list may not be complete, but Rule §9.219(e) requires that you provide by first class mail a copy of the hearing notice to any owner of a well within ½ mile radius of the well or wells that you listed in your HUPP application. The notice(s) must be mailed at least 10 days prior to your hearing date. You are also required to provide to the District, prior to your hearing date, a copy of the attached affidavit regarding your requirement to provide notification by first class mail to landowners, well owners and well operators within one half-mile of the well or wells owned by Pure Water Supply Corporation.

If you have any questions concerning this matter, please call me at (254) 759-5610. Please keep this letter as a permanent record for your file.

Sincerely,

Tricia K. Law, General Manager
Southern Trinity Groundwater Conservation District

Attachments: 1) Technical Summary
2) Affidavit
3) Draft of Proposed Historic Use Production Permit
4) Notice of Hearing

Technical Review Summary

Well Owner: Pure Water Supply Corporation,
P.O. Box 154414,
Waco, Texas, 76715

Application Summary For HUPP-2010-030:

Aquifer: Trinity
Annual production of groundwater not to exceed: 84.4251 acre-feet
Year of Maximum Historic Use: 2000
Hearing Group: 3

Location of Each Point of Withdrawal:

Latitude/Longitude (NAD83):
N31D 40M 03S / W97D 04M 59S
N31D 39M 41S / W97D 03M 32S

Reasons and Technical Basis for Recommended Action

The applicant submitted documentation other information that, in the opinion of the General Manager, reasonably showed evidence of Historical Use Production from the Trinity Aquifer of 84.4251 acre-feet during the calendar year of 2000.

Proposed Purpose of Use

All groundwater produced under the proposed permit is restricted to Municipal Use within the Applicant's Water Service Area as defined by the Applicant's Certificate of Convenience and Necessity 10036 issued by the Texas Commission on Environmental Quality.

General Manager May Modify Recommendations or Request Additional Information

The General Manager of the District may at anytime modify her recommendations to the Board of Directors regarding the proposed permit or this technical summary or request additional information from the applicant.

Request for Contested Case Hearing

HUPP applicants or affected persons may file a written request for a contested case hearing on the proposed HUPPs with the District by no later than at 9:00 a.m. five days prior to the hearing date. If no timely requests for contested case hearing are filed, the applications will be presented to the District on the date of the hearing for final action.

AFFIDAVIT

THE STATE OF TEXAS §

§

COUNTY OF MCLENNAN §

BEFORE ME, the undersigned authority, on this day personally appeared _____, who being duly sworn, upon oath deposes and says:

"My name is _____. I am over 18 years of age, competent to make this affidavit, and am familiar with the facts herein stated and believe them to be true.

I have complied with the requirements of the Southern Trinity Groundwater Conservation District's Rules to provide notification by first class mail to landowners, well owners and well operators within one half-mile of the well or wells for which I or the entity I represent seek(s) a Historic Use Production Permit. Such notification was made not less than 10 days before the public hearing scheduled to consider the application for a Historic Use Production Permit **HUPP-2010-030**."

_____

Affiant

Sworn to and subscribed before me on this _____ day of _____, 2010.

_____

Notary Public in and for the State of Texas

HISTORIC USE PRODUCTION PERMIT

THIS CERTIFIES THAT: Pure Water Supply Corporation
P.O. Box 154414
Waco, Texas 76715
Phone: 254-412-1511

(the "Permittee"), has applied for an Historic Use Production Permit to withdraw and place to beneficial use groundwater from within the District, and that the Board of Directors of the Southern Trinity Groundwater Conservation District ("District") has APPROVED the application as follows:

Permit Category

This permit is a **Historic Use Production Permit.**

Permit Term

The term of this permit is **perpetual.**

Groundwater Source

The source of groundwater is the **Trinity Aquifer.**

Annual Groundwater Withdrawal Amounts

Permittee may withdraw groundwater from the Trinity Aquifer for beneficial, nonwasteful use in a manner not to exceed the following volume: **84.4251 acre-feet per calendar year.** This groundwater withdrawal amount has been calculated pursuant to Section 5.211 of the District's rules. It may be subject to proportional adjustment pursuant to Chapter 5, Subchapter B of the District's rules, as may be amended.

Purpose of Use

Permittee may use Trinity Aquifer groundwater only for **municipal purposes.**

Well Name(s), Location(s), and Maximum Rate of Withdrawal

Groundwater may only be withdrawn from the aquifer from a well(s) located at each of the location(s) and with a maximum rate of withdrawal(s) (flow rate) as follows:

Name	Location (latitude/longitude)	Maximum Flow Rate
Well # 1	N31D 40M 03S / W97D 04M 59S	200
Well # 2	N31D 39M 41S / W97D 03M 32S	300

Measurement of Amount of Groundwater Withdrawn

Permittee may only withdraw groundwater from a well that has an operating flow meter that meets the requirements of Chapter 8 of the District's rules.

Place of Use

Permittee may beneficially use Aquifer groundwater only within the Permittee's wholesale or retail water service area identified in the Certificate of Convenience and Necessity 10036, filed with the Texas Commission on Environmental Quality. Except as provided by 5.401(b) of the District's rules, as may be amended, if the place of use is not within the District's boundaries, Permittee must obtain a groundwater exportation permit from the District prior to the withdrawal of groundwater under the permit.

Well Construction, Operation, Maintenance, Closure

The well(s) identified in this permit shall be installed, equipped, operated, maintained, plugged, capped, or closed, as may be appropriate in accordance with the District's rules and all other applicable federal, state, and local laws, including by submitting a copy of a state plugging report to the District within 60 days after capping or plugging any well.

Water Conservation

Withdrawals of groundwater are required to be efficiently withdrawn and used in compliance with the District's rules and the District's water conservation plan, as may be amended, and Permittee's plan as approved by the District, as may be applicable.

Conveyance to Place of Use

Water authorized by this permit to be produced must be conveyed to the place of use in a manner to prevent evaporation, channel loss by percolation, or waste. Water conveyed greater than a distance of one-half mile from the wellhead where produced must be conveyed through a pipeline.

Meters; Alternative Measuring Method

Permittee shall install, operate and maintain the meter or alternative measuring method on the well(s) identified in this permit in compliance with the District's rules and the manufacturer's instructions.

Reports

Permittee shall timely file all applicable reports with the District on forms prescribed by the District as required by the District's rules, as may be amended, and other applicable law.

Fees

Permittee shall timely pay and remain current on the payment of all applicable fees to the District.

Interruption, Suspension, or Other Limitations Due to Drought

Permittee shall reduce water supply and consumption during times of drought in accordance with the District's rules and the District's management plan and Permittee's plan approved by the District, as applicable.

Groundwater Management Plan

Permittee shall withdraw and use groundwater only in accordance with the District's approved groundwater management plan, as may be amended.

Water Quality

Permittee shall use diligence to protect the water quality of groundwater in the District and shall comply with the District's water quality rules and take no action that pollutes or contributes to the pollution of groundwater in the District.

Transfers and Amendments

Permittee may transfer or amend this permit only in compliance with the District's rules.

Permit Review, Renewal or Extension Conditions

Permittee is subject to any review, renewal or extension conditions stated in the permit or the District's rules.

Change of Name, Address or Telephone Number

Permittee shall provide written notice to the District of any change of ownership, name of Permittee or the authorized representative, well operator, mailing address or telephone number within 30 days of such change.

Inspections by District

Any authorized officer, employee, agent or representative of the District shall have the right at all reasonable times to enter upon lands upon which a well may be located within the boundaries of the District, including the well(s) identified in Paragraph 6 of this permit, for the purpose of inspecting or testing such wells, meters, pumps and the power units of a well or wells, collecting water samples, and making any other reasonable and necessary inspections and tests that may be required or necessary for the formulation or the enforcement of the permits, rules or orders of the District. Permittee has a duty to ensure that the well site is accessible to District representatives for inspection and to cooperate fully in any reasonable inspection of the well(s) and well site by District representatives.

Additional Conditions

This permit is issued subject to the requirements of: (1) Chapter 8821, Texas Special District Local Laws Code; (2) Chapter 36, Texas Water Code, as may be amended; and (3) the District's Rules, as may be amended.

Enforcement

The District retains the right to take any and all enforcement actions within its legal authority to enforce compliance with the terms and conditions of this permit.

Continuing Jurisdiction of District

This permit is issued subject to the continuing jurisdiction of and supervision by the District, and may be amended from time to time consistent with applicable law, including if the District learns that any of the information set forth in this permit is incorrect on the date issued.

Permit Recordation

Within 30 days of the date of issuance of this approved permit from the District, Permittee shall record this permit with the County Clerk of every county in which the well(s) or place of use are located and provide a copy of the recorded permit to the District.

References to Law

Any reference in this permit to a statute, rule, or other law of any kind, that exists on the date of issuance of the permit includes all subsequent amendments and additions thereto.

Other Matters Denied

All other matters requested in Permittee's application that are not specifically granted by this permit are denied.

THIS PERMIT IS ISSUED, EXECUTED THIS 6th day of October, 2010, by the Board of Directors of the Southern Trinity Groundwater Conservation District.

_____
Rodney Kroll,
President, Board of Directors

ATTEST:

_____
Glen Thurman
Secretary, Board of Directors

ACKNOWLEDGMENT

STATE OF TEXAS)
COUNTY OF MCLENNAN)
ON BEHALF OF THE DISTRICT, THIS PERMIT WAS ACKNOWLEDGED before me on October 6, 2010, by Rodney Kroll, President, Board of Directors, Southern Trinity Groundwater Conservation District, a groundwater conservation district created pursuant to Article XVI, Section 59, Texas Constitution.

_____
Notary Public in and for the State of Texas

AFTER RECORDING RETURN TO:
Tricia Law, General Manager
Southern Trinity Groundwater Conservation District
P. O. Box 2205
420 North 6th Street
Waco, Texas 76703

NOTICE OF PROPOSED HISTORIC USE PRODUCTION PERMITS AND PUBLIC HEARING

The Southern Trinity Groundwater Conservation District ("District") proposes action on applications for Historic Use Production Permits ("HUPPs"), which would authorize the permittees to withdraw groundwater from the Trinity Aquifer according to the terms and conditions set forth in the permits. A copy of the General Manager's proposed action, the proposed HUPPs and technical summaries are available for public inspection at the District's offices at 420 North 6th Street, Waco, Texas during regular business hours.

The District will conduct a public hearing pursuant to its authority under Chapter 8821 of the Texas Special District Local Laws Code, Chapter 36 of the Texas Water Code and the District's rules, to consider issuance of the proposed HUPPs and to provide interested members of the public the opportunity to appear and provide oral or written comments to the District regarding the proposed permits at the following date, time and place:

Date:	Wednesday, October 6, 2010
Time:	9:00 a.m.
Location:	City of Woodway, City Council Chambers 922 Estates Drive Woodway, Texas

HUPPs are proposed to be granted to the following entities as follows:

City of West, 110 N Reagan St., West, Texas, 76691 filed an application on 3/10/2010. The proposed HUPP has a maximum annual withdrawal of 487.3884 acre-feet (151641000 gallons) for municipal use pumped from well(s) located at the following latitude(s)/longitude(s) (NAD83): N31D 48M 58S / W97D 05M 33S.

Levi Water Supply Corporation, 2757 Rosenthal Pkwy, Lorena, Texas, 76655 filed an application on 4/16/2010. The proposed HUPP has a maximum annual withdrawal of 267.3430 acre-feet (87114000 gallons) for municipal use pumped from well(s) located at the following latitude(s)/longitude(s) (NAD83): N31D 23M 19S / W97D 06M 51S, N31D 23M 33S / W97D 09M 44S, N31D 23M 21S / W97D 10M 24S.

City of Bruceville-Eddy, 143 Wilcox Dr., Eddy, Texas, 76524 filed an application on 4/26/2010. The proposed HUPP has a maximum annual withdrawal of 347.4870 acre-feet (113229000 gallons) for municipal use pumped from well(s) located at the following latitude(s)/longitude(s) (NAD83): N31D 22M 02S / W97D 13M 29S, N31D 22M 02S / W97D 13M 28S, N31D 19M 02S / W97D 18M 22S, N31D 17M 47S / W97D 15M 13S, N31D 19M 22S / W97D 14M 12S.

Pure Water Supply Corporation, P.O. Box 154414, Waco, Texas, 76715 filed an application on 4/30/2010. The proposed HUPP has a maximum annual withdrawal of 84.4251 acre-feet (27510000 gallons) for municipal use pumped from well(s) located at the following latitude(s)/longitude(s) (NAD83): N31D 40M 03S / W97D 04M 59S, N31D 39M 41S / W97D 03M 32S.

Gholson Water Supply Corporation, 12520 Gholson Rd., Waco, Texas, 76705 filed an application on 5/3/2010. The proposed HUPP has a maximum annual withdrawal of 270.0348 acre-feet (87991100 gallons) for municipal use pumped from well(s) located at the following latitude(s)/longitude(s) (NAD83): N31D 44M 24S / W97D 15M 13S, N31D 43M 51S / W97D 14M 38S, N31D 44M 35S / W97D 15M 32S.

City of Crawford, 6719 North Lonestar Parkway, Crawford, Texas, 76638 filed an application on 4/5/2010. The proposed HUPP has a maximum annual withdrawal of 140.1822 acre-feet (45678500 gallons) for municipal use

pumped from well(s) located at the following latitude(s)/longitude(s) (NAD83): N31D 31M 59S / W97D 27M 05S, N31D 31M 35S / W97D 27M 43S.

CS Community WSC, P.O. Box 385, China Spring, Texas, 76633 filed an application on 4/5/2010. The proposed HUPP has a maximum annual withdrawal of 55.1193 acre-feet (17960670 gallons) for municipal use pumped from well(s) located at the following latitude(s)/longitude(s) (NAD83): N31D 39M 13S / W97D 18M 44S.

South Bosque Water Supply Corporation, 536 River Park, McGregor, Texas, 76657 filed an application on 4/5/2010. The proposed HUPP has a maximum annual withdrawal of 18.2148 acre-feet (5935300 gallons) for municipal use pumped from well(s) located at the following latitude(s)/longitude(s) (NAD83): N31D 29M 34S / W97D 17M 22S.

H & H Water Supply Corporation, 192 Old Hallsburg Rd., Riesel, Texas, 76682 filed an application on 4/16/2010. The proposed HUPP has a maximum annual withdrawal of 212.7792 acre-feet (69334300 gallons) for municipal use pumped from well(s) located at the following latitude(s)/longitude(s) (NAD83): N31D 31M 20S / W96D 59M 22S, N31D 31M 14S / W96D 59M 04S.

Prairie Hill Water Supply Corporation, 5337 A Hwy 73, Prairie Hill, Texas, 76678 filed an application on 4/21/2010. The proposed HUPP has a maximum annual withdrawal of 210.0791 acre-feet (68454500 gallons) for municipal use pumped from well(s) located at the following latitude(s)/longitude(s) (NAD83): N31D 38M 00S / W96D 54M 14S, N31D 37M 38S / W96D 54M 58S.

Hilltop Water Supply Corporation, P.O. Box 127, Itasca, Texas, 76055 filed an application on 4/30/2010. The proposed HUPP has a maximum annual withdrawal of 105.0262 acre-feet (34222900 gallons) for municipal use pumped from well(s) located at the following latitude(s)/longitude(s) (NAD83): N31D 46M 52S / W97D 05M 47S, N31D 46M 39S / W97D 04M 20S, N31D 47M 06S / W97D 04M 30S.

Windsor Water Company, 186 New Windsor Parkway, Waco, Texas, 76712 filed an application on 4/23/2010. The proposed HUPP has a maximum annual withdrawal of 131.1642 acre-feet (42740000 gallons) for municipal use pumped from well(s) located at the following latitude(s)/longitude(s) (NAD83): N31D 38M 47S / W96D 58M 30S, N31D 31M 07S / W97D 17M 35S.

City of McGregor, 302 South Madison St., McGregor, Texas, 76657 filed an application on 4/30/2010. The proposed HUPP has a maximum annual withdrawal of 225.1041 acre-feet (119000000 gallons) for municipal use pumped from well(s) located at the following latitude(s)/longitude(s) (NAD83): N31D 26M 35S / W97D 24M 53S, N31D 26M 06S / W97D 25M 10S, N31D 26M 05S / W97D 24M 01S, N31D 25M 09S / W97D 24M 59S, N31D 24M 55S / W97D 25M 27S, N31D 24M 22S / W97D 26M 17S,

Moore Water System, 476 Beaver Ln., Waco, Texas, 76705 filed an application on 4/29/2010. The proposed HUPP has a maximum annual withdrawal of 19.6324 acre-feet (6397231 gallons) for municipal use pumped from well(s) located at the following latitude(s)/longitude(s) (NAD83): N31D 37M 39S / W96D 59M 42S, ,

East Crawford Waster Supply Corporation, P.O. Box 180, Crawford, Texas, 76638 filed an application on 4/30/2010. The proposed HUPP has a maximum annual withdrawal of 229.8894 acre-feet (74909700 gallons) for municipal use pumped from well(s) located at the following latitude(s)/longitude(s) (NAD83): N31D 33M 06S / W97D 23M 18S, W31D 31M 40S / W97D 19M 04S.

North Bosque Water Supply Corporation, P.O. Box 8581, Waco, Texas, 76714 filed an application on 4/30/2010. The proposed HUPP has a maximum annual withdrawal of 411.2647 acre-feet (134011000 gallons) for municipal use pumped from well(s) located at the following latitude(s)/longitude(s) (NAD83): N31D 36M 24S / W97D 18M 32S, N31D 35M 49S / W97D 21M 37S, N31D 36M 24S / W97D 19M 0.1S,

Cross Country Water Supply Corporation, P.O. Box 87, China Spring, Texas, 76633 filed an application on 4/30/2010. The proposed HUPP has a maximum annual withdrawal of 498.1268 acre-feet (162315100 gallons) for municipal use pumped from well(s) located at the following latitude(s)/longitude(s) (NAD83): N31D 40M

56S / W97D 16M 45S, N31D 40M 59S / W97D 16M 34S, N31D 41M 12S / W97D 19M 47S, N31D 40M 48S / W97D 15M 25S.

City of Hewitt, P.O. Box 610, Hewitt, Texas, 76643 filed an application on 4/30/2010. The proposed HUPP has a maximum annual withdrawal of 2083.2675acre-feet (678834800 gallons) for municipal use pumped from well(s) located at the following latitude(s)/longitude(s) (NAD83): N31D 27M 37S / W97D 10M 37S, N31D 26M 55S / W97D 15M 42S, N31D 27M 30S / W97D 12M 22S, N31D 25M 44S / W97D 14M 32S, N31D 27M 18S / W97D 12M 55S, N31D 26M 22S / W97D 12M 51S.

City of Mart, 112 N. Commerce, Mart, Texas, 76664 filed an application on 4/30/2010. The proposed HUPP has a maximum annual withdrawal of 183.4090 acre-feet (59764000 gallons) for municipal use pumped from well(s) located at the following latitude(s)/longitude(s) (NAD83): N31D 34M 35S / W96D 55M 32S.

Cottonwood Water Supply Corporation, P.O. Box 569, West, Texas, 76691 filed an application on 5/3/2010. The proposed HUPP has a maximum annual withdrawal of 66.1947 acre-feet (21569600 gallons) for municipal use pumped from well(s) located at the following latitude(s)/longitude(s) (NAD83): N31D 49M 54S / W97D 02M 46S.

HUPP applicants or affected persons may file a written request for a contested case hearing on the proposed HUPPs with the District by no later than October 1, 2010 at 9:00 a.m. If no timely requests for contested case hearing are filed, the applications will be presented to the District on the date of the hearing for final action.

ISSUED THIS 23th DAY OF SEPTEMBER 2010.

Tricia K. Law, General Manager
Southern Trinity Groundwater Conservation District

App No. HUPP-2010-030

SOUTHERN TRINITY GROUNDWATER CONSERVATION DISTRICT

P. O. Box 2205
420 North 6th Street
Waco, Texas 76703
Phone: (254) 759-5610 southerntrinitygcd@att.net

APPLICATION FOR HISTORIC USE PRODUCTION PERMIT

Part A – General Information

Instructions: Please type or print legibly. Incomplete applications will not be accepted. Application Fee Required: A non-refundable application fee of $1,000 must accompany this application. Only checks or money orders made payable to "Southern Trinity Groundwater Conservation District" will be accepted. CASH IS NOT ACCEPTED.

1. Applicant Information — Individual — Partnership — Corporation — Government Entity — Estate/Trust/Guardianship

Permit Applicant's Name: Pure Water Supply Corp.

Physical Address:

City: State: Zip Code:

Mailing Address, (if different): P.O. Box 154414

City: Waco State: Tx Zip Code: 76715

Daytime Telephone Number: 254 412 1511 Fax: 2

Email Address (if any): Pure Water Supply @ Gmail.com

Susan 412 1511

2. Name of Authorized Agent (if any): Barry Hand

Position: Operator.

Physical Address: 10567 Leroy Pkwy

City: West State: Tx Zip Code: 76691

Mailing Address (if different):

City: State: Zip Code:

Daytime Telephone Numbers of Authorized Agent: 254 7095889 Fax:

RECEIVED APR 30 2010 BY: [illegible]

RECEIVED APR 30 2010 BY:

Email for Authorized Agent (if any):

For District Use Only

Date Application Received:_____ Date Admin. Fee Received: _____ Amount of Fee:

Historic Groundwater Use and Production Information.

3. Purpose of Historic Use: The purpose(s) for which the groundwater was used during the Historic Use Period. Irrigation Municipal Industrial
Other (If Other, describe specifically):

4. Purpose of Future Use: Municipal

5. Is the place of use within the District boundaries: Yes No

6. If you answered No to Item 5, has a groundwater exportation permit been applied for or obtained from the District or is there a groundwater export agreement or contract in effect prior to January 7, 2010? Yes No

7. If you answered Yes to Item 6, please describe the parties to the agreement, the location outside of the District that the water is used, the amount use, and pipeline route.

8. Completely describe the place of use of groundwater withdrawn from the well:
IW CCN # 10036

9. If groundwater was withdrawn from the well or placed to a beneficial use by a contract user or predecessor in interest, then provide the name, address, and telephone number of each contract user or predecessor in interest, and provide copies of the legal documents establishing the legal right of the contract user or predecessor in interest to withdraw and/or place groundwater from the well to beneficial use.

N/A

10. If applicable, provide a copy of the map identifying the boundaries of the applicant's Certificate of Convenience and Necessity (CCN).

11. If applicable, describe the number of connections to be serviced by the well: 260

12. Maximum Historic Use. State the amount of water that you claim as your

Maximum Historic Use during any one year of the Historic Use Period. Maximum Historic Use means the maximum amount of groundwater that an applicant for a Historic Use Production Permit proves was produced and beneficially used without waste from the applicant's non-exempt well during any one calendar year of the Historic Use Period. Amount: 27,510,000 Units:

Year: 2000

13. Provide your use amounts for each year groundwater was withdrawn during the Historical Use Period. If no groundwater was withdrawn for a period listed below, place a zero (0) in the appropriate space (typical units are in gallons, 100 gallons, 1000 gallons, or acre-feet).

2009	Amount:	18,696,200	Units:
2008	Amount:	22,167,000	Units:
2007	Amount:	19,611,000	Units:
2006	Amount:	23,782,000	Units:
2005	Amount:	26,992,000	Units:
2004	Amount:	22,052,000	Units:
2003	Amount:	26,706,000	Units:
2002	Amount:	23,659,000	Units:
2001	Amount:	23,958,000	Units:
2000	Amount:	27,510,000	Units:

14. Attach documents to substantiate your claim of Maximum Historic Use. Documentation may include, but is not limited to: production logs showing amount of water pumped, copies of reports to the Texas Commission on Environmental Quality, the Texas Water Development Board, or the Texas Department of Health; reports filed with or created by the Natural Resource Conservation Service or Farm Services Agency or aerial photographs; reports filled with or created by soil and water conservation districts; fuel and electricity use records; and calculations used to estimate well discharge rates if the well discharge is not metered. The purpose of supporting documentation is to substantiate your declaration. The information you provide should be labeled, indexed and in a form that can be easily reviewed by the District.

15. Will the proposed use of water unreasonably affect existing groundwater and surface water resources or existing permit holders? Yes No

16. Is the proposed use of water dedicated to a beneficial use? Yes No

17. Is the proposed use of water consistent with the District's management plan?

Yes No

STATEMENT OF COMPLIANCE WITH DISTRICT GROUNDWATER MANAGEMENT PLAN, DISTRICT RULES, AND COMMITMENT TO WATER CONSERVATION AND WATER QUALITY PROTECTION

Please check all that apply:

✓ Applicant will comply with the District's Groundwater Management Plan.

✓ Applicant is in compliance with all applicable District rules in effect since December 7, 2007 and will comply with the District's rules.

✓ Applicant agrees to avoid waste and achieve water conservation.

✓ Applicant agrees to use reasonable diligence to protect groundwater quality and will follow the District's well plugging guidelines at the time of well closure.

✓ Applicant affirms that activities constituting the purpose of use for which the groundwater will be beneficially used will be managed to preserve, protect, prevent the pollution, degradation, or harmful alteration of, control and prevent the waste of, prevent the escape of groundwater from, and achieve the conservation of groundwater in and produced from, the aquifer.

CERTIFICATION†

I, the undersigned applicant, subscribe and affirm that the information provided herein is true and correct. I also understand that it shall be considered to be a fraud upon the District for any applicant to knowingly give erroneous information in this application.

Signed: Roscoe Bush Date: 4-29-2010

Printed Name: Roscoe Bush Title: President

† If the applicant is an individual, the application shall be signed by the applicant or a duly appointed agent. An agent shall provide written evidence of his or her authority to represent the applicant. If the applicant is an individual doing business under an assumed name, the applicant shall attach to the application an assumed name certificate filed with the county clerk of the county in which the principal place of business is located or with the Texas Secretary of State.

A joint application shall be signed by each applicant or each applicant's duly authorized agent with written evidence of such agency submitted with the application. If a well or proposed well is owned by both husband and wife, each person shall sign the application. Joint applicants shall select one among them to act for and represent the others in pursuing the application with the District with written evidence of such representation to be submitted with the application.

If the application is by a partnership, the application shall be signed by one of the general partners. If the applicant is a partnership doing business under an assumed name, the applicant shall attach to the application an assumed name certificate filed with the county clerk of the county in which the principal place of business is located or with the Texas Secretary of State. The name of the partnership must be followed by the words "a partnership."

If the applicant is an estate or guardianship, the application shall be signed by the duly appointed guardian or representative of the estate and a current copy of the letters testamentary issued by the court shall be attached to the application.

If the applicant is a corporation, public district, county, municipality or other corporate entity, the application shall be signed by a duly authorized official. Written evidence in the form of bylaws, charters, or resolutions specifying the authority of the official to take such action shall be submitted along with the application. A corporation may file a corporate affidavit as evidence of a corporate official's authority to sign.

STATE OF TEXAS §

§

COUNTY OF McLennan §

BEFORE ME, a notary public, on this day personally appeared:

Roscoe Bush. Roscoe Bush who stated that: (1) he/she has read the foregoing application and any supporting attachments and that the statements contained therein are true and accurate; and (2) that he/she is duly authorized to sign this application on behalf of the permit applicant.

Roscoe Bush

Subscribed and sworn to before me on this 29 day of April, 2010.

Barry Hand.

Notary Signature

BARRY LYNN HAND
Notary Public
STATE OF TEXAS
My Comm. Exp. May 1, 2014

STGWCD- HUPP Application - Part B – Well Information (one form per well)

1. Applicant Name:

2. Well Identifier or Well Name: Lincoln City Road. Well # 1

3. System Name: Pure Water Supply Corp.

4. TCEQ System ID Number: 1550039

5. If applicable, please attach a copy of the applicant's most recent water conservation plan and drought contingency plan prepared for TCEQ.

6. TWDB ID Number: 402501

7. Aquifer(s) or formations in which the well is screened: Trinity

8. Address of the property upon which the well is located: 1260 Lincoln City Rd. Elm Mott Tx 76640

9. Well Location: Latitude: D M S

Longitude: D M S

10. Identify any surface water, including lakes or rivers within 1,000 feet of the well:

11. Well or Driller's Log. Please attach a copy of the State Well Report and, if available, any geophysical logs for the well.

12. Please attach a photograph of the well taken approximately 100 feet from the well.

13. Please attach a copy of a recorded deed or other legal document verifying the applicant's ownership of the well. Disregard this requirement if the deed was sent with your Application for Interim Production Status and there has been no change.

14. Year well drilled: 1967 Year well completed and operational: 1967

15. Pump Information: Pump Make and Model:

Pump power source: Electric Diesel Natural Gas Other

Casing Material Steel PVC

Size of well casing: 7 inches Inside diameter of column pipe: 3½" inches

16. The maximum rate at which water can be withdrawn from the well: gpm

17. Flow Meter Make and Model: 4" Water Specialities

Serial Number: 20091742 Meter Units:

Meter reading end of 2008: Amount: Units: Date:

Meter reading end of 2009: Amount: Units: Date:

well #1

STGWCD- HUPP Application - Part B – Well Information (one form per well)

1. Applicant Name:

2. Well Identifier or Well Name: Well #2 (Oak Knoll Lane)

3. System Name: Pure Water Supply Corp.

4. TCEQ System ID Number: 1550039

5. If applicable, please attach a copy of the applicant's most recent water conservation plan and drought contingency plan prepared for TCEQ.

6. TWDB ID Number:

7. Aquifer(s) or formations in which the well is screened: Trinity

8. Address of the property upon which the well is located: 244 Oak Knoll Lane Elmendorf TX 78640

9. Well Location: Latitude: D M S

Longitude: D M S

10. Identify any surface water, including lakes or rivers within 1,000 feet of the well:

11. Well or Driller's Log. Please attach a copy of the State Well Report and, if available, any geophysical logs for the well.

12. Please attach a photograph of the well taken approximately 100 feet from the well.

13. Please attach a copy of a recorded deed or other legal document verifying the applicant's ownership of the well. Disregard this requirement if the deed was sent with your Application for Interim Production Status and there has been no change.

14. Year well drilled: 2009 Year well completed and operational: 2009

15. Pump Information: Pump Make and Model: Franklin 100 HP

Pump power source: (Electric) Diesel Natural Gas Other

Casing Material (Steel) PVC

Size of well casing: 10 3/4 inches Inside diameter of column pipe: 4 inches

16. The maximum rate at which water can be withdrawn from the well: gpm

17. Flow Meter Make and Model: Water Specialities 4"

Serial Number: 20091002 Meter Units:

Meter reading end of 2008: Amount: Units: Date:

Meter reading end of 2009: Amount: Units: Date:

If the applicant is acting as trustee for another, the applicant shall sign as trustee and in the application shall disclose the nature of the trust agreement and give the name and current address of each trust beneficiary. The application must designate the trustee's name followed by the word "trustee," and the name of the trust for which the trustee is acting.

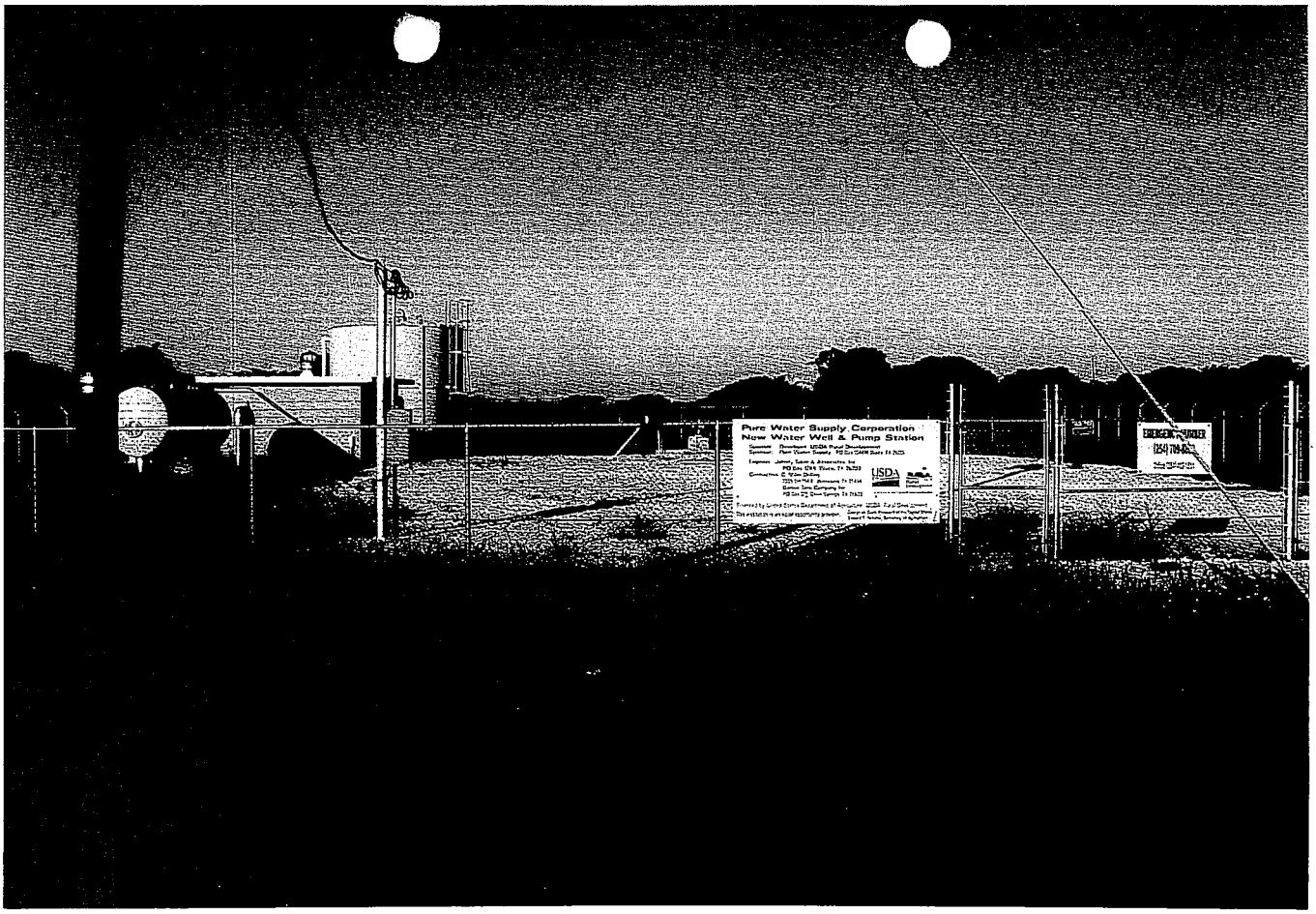
Pure Water Supply Corporation
New Water Well & Pump Station
USDA

well #2

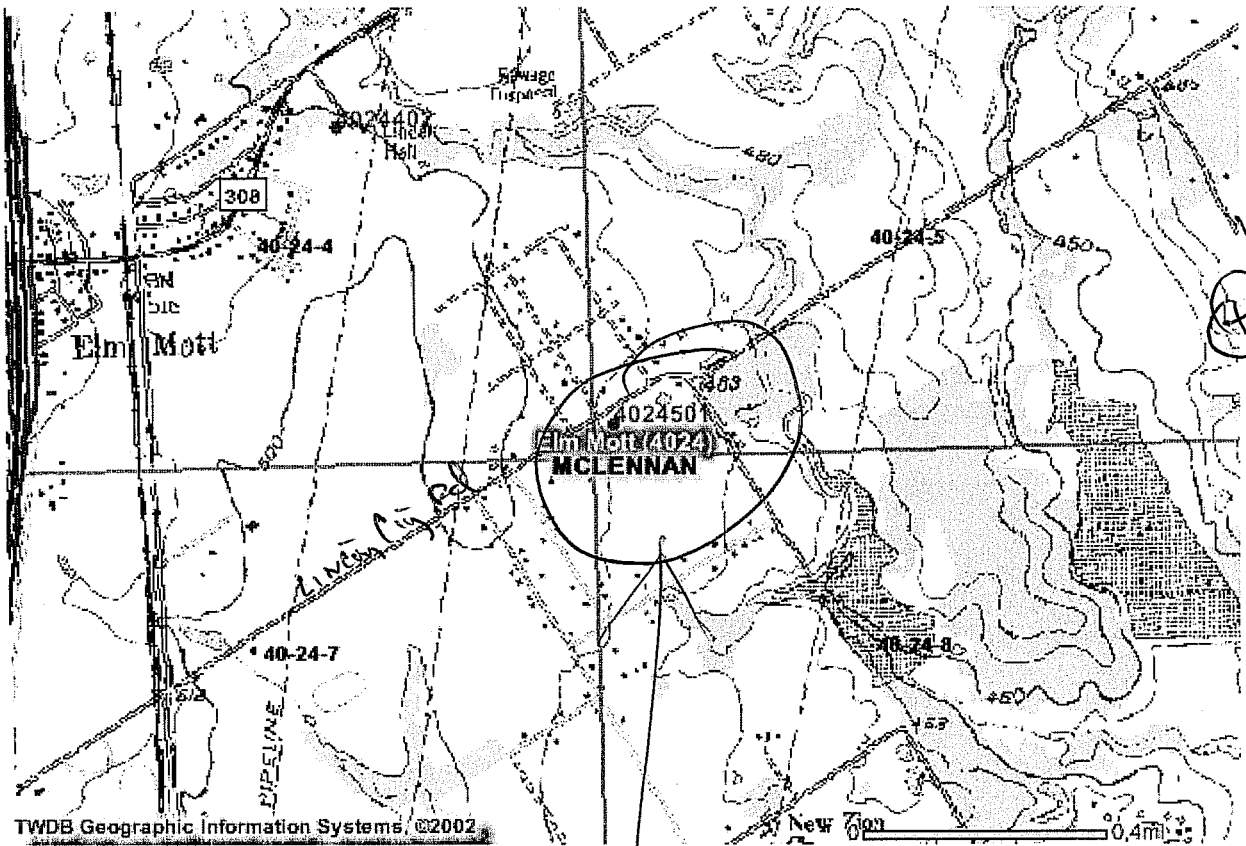

Well #2
On Oak Dale

Well #1
On Linden City Rd

§290.47(c) Appendix C: Sample Sanitary Control Easement Document for a Public Water Well.

SANITARY CONTROL EASEMENT

DATE: June, 29 , 2006

GRANTOR(S): Pure Water Supply Corporation

GRANTOR'S ADDRESS: P.O. Box 154414, Waco, Texas 76715-4414

GRANTEE: Pure Water Supply Corporation

GRANTEE'S ADDRESS: P.O. Box 154414, Waco, Texas 76715-4414

EASEMENT 2 PGS 2006041519

SANITARY CONTROL EASEMENT:

Purpose, Restrictions, and Uses of Easement:

1. The purpose of this easement is to protect the water supply of the well described and located below by means of sanitary control.

2. The construction and operation of underground petroleum and chemical storage tanks and liquid transmission pipelines, stock pens, feedlots, dump grounds, privies, cesspools, septic tank or sewage treatment drainfields, improperly constructed water wells of any depth, and all other construction or operation that could create an insanitary condition within, upon, or across the property subject to this easement are prohibited within this easement. For the purpose of the easement, improperly constructed water wells are those wells which do not meet the surface and subsurface construction standards for a public water supply well.

3. The construction of tile or concrete sanitary sewers, sewer appurtenances, septic tanks, storm sewers, and cemeteries is specifically prohibited within a 50-foot radius of the water well described and located below.

4. This easement permits the construction of homes or buildings upon the Grantor's property as long as all items in Restrictions Nos. 2 and 3 are recognized and followed.

5. This easement permits normal farming and ranching operations, except that livestock shall not be allowed within 50 feet of the water well.

The Grantor's property subject to this Easement is described in the documents recorded at:

Deed Records of McLennan County, Texas

Volume 1465, Pages 80 of the Real Property Records of McLennan County, Texas.

Property Subject to Easement:

All of that area within a 150-foot radius of the water well located _____ feet at a radial of _____ degrees from the _____ corner of Lot _____, of a Subdivision of Record in ~~Book~~ Volume 1004, Page 30 6 of the County Plat Records, McLennan County, Texas.

TERM:

This easement shall run with the land and shall be binding on all parties and persons claiming under the Grantor(s) for a period of two years from the date that this easement is recorded; after which time, this easement shall be automatically extended until the use of the subject water well as a source of water for public water systems ceases.

ENFORCEMENT:

Enforcement of this easement shall be proceedings at law or in equity against any person or persons violating or attempting to violate the restrictions in this easement, either to restrain the violation or to recover damages.

INVALIDATION:

Invalidation of any one of these restrictions or uses (covenants) by a judgement or court order shall not affect any of the other provisions of this easement, which shall remain in full force and effect.

FOR AND IN CONSIDERATION, of the sum of One Dollar ($1.00) and for other good and valuable consideration paid by the Grantee to the Grantor(s), the receipt of which is hereby acknowledged, the Grantor does hereby grant and convey to Grantee and to its successors and assigns the sanitary control easement described in this easement.

GRANTOR(S)
By: Roscoe Bush

ACKNOWLEDGMENT

STATE OF TEXAS §
§
COUNTY OF McLennan §

BEFORE ME, the undersigned authority, on the day of 9-11, 20 06, personally appeared Roscoe Bush known to me to be the person(s) whose name(s) is(are) subscribed to the foregoing instrument and acknowledged to me that executed the same for the purposes and consideration therein expressed.

Barry Hand
Notary Public in and for
THE STATE OF TEXAS
My Commission Expires: May-10-2010
Barry Hand
Typed or Printed Name of Notary

BARRY LYNN HAND
Notary Public, State of Texas
My Commission Expires
May 01, 2010

Recorded in _____ Courthouse, _____ Texas on _____, 20____

Mail To
Tabor & Associates
Go Chris Hill
PO Box 1788
Waco, Tx 76703

FILED AND RECORDED
OFFICIAL PUBLIC RECORDS
J.A. Andy Harwell
November 02, 2006 09:54:18 AM 2006041519
FEE: $15.00
J.A. "Andy" Harwell County Clerk
Mclennan County TEXAS

[redacted]

2505

THE STATE OF TEXAS

County of McLENNAN

Know all Men by these Presents:

THAT WE, James Lee Majors and wife, Gwendolyn Majors

of the County of McLennan State of Texas for and in consideration of ..... TEN AND NO/100 ($10.00) ..... Dollars and other good and valuable consideration, to us, cash in hand paid by PURE WATER SUPPLY CORPORATION, the receipt whereof which is hereby acknowledged;

The Grantors hereby state that they understand that this property will be used for the drilling, construction and operation of a waterwell for domestic and other purposes. The grantors, their heirs and assigns herein agree that the land owned by them adjoining the property herein conveyed will be restricted so that:

(1) No cesspool, septic tank or drain field will be constructed within 150 feet of the well.

(2) No sewage treatment plant will be constructed within 500 feet of the well site.

(3) No stock shall be permitted within fifty feet of the well.

(4) Terrain will not be changed to cause surface water to drain to the well.

Grantors own the property adjacent to the hereinafter described property.

have Granted, Sold and Conveyed, and by these presents do Grant, Sell and Convey unto the said

PURE WATER SUPPLY CORPORATION

of the County of McLENNAN State of TEXAS all that certain piece or parcel of land, lying and being situated in the County of McLennan and State of Texas and being de scribed as follows, to-wit: Being 75 X 125 feet out of the S. Burton Survey in McLennan County, Texas, and being a part of that certain 33 acre tract of land conveyed to L.W. Johnson by deed recorded in Volume 579, Page 40 of the McLennan County, Texas, Deed Records. BEGINNING at a stake in the South line of a county gravel road at a point S 30 degrees E 30 ft. and N 60 degrees E 350 ft. from the NW corner of the said 33 acre tract. THENCE N 60 degrees E 75 ft. with the South line of the said road to a stake for the NE corner of this. THENCE S 30 degrees E 125 ft. to a stake for the SE corner of this. THENCE S 60 degrees W 75 ft. to a

SECTION A.
RESOLUTIONS

THE BOARD OF DIRECTORS OF PURE WATER SUPPLY CORPORATION ESTABLISHES THAT :

1. This Tariff of the Pure Water Supply Corporation, serving in (list or name county(or counties)) consisting of Sections A. through H. and forms inclusive, is adopted and enacted as the current regulations and policies effective as of October 10, 2005.

2. Only those preexisting written contracts or agreements executed by the present or previous Board of Directors shall remain in effect, unless the contract or agreement requires compliance with changes of the tariff from time to time.

3. The adoption (or revisions) of this tariff does not prohibit or limit the Corporation from enforcing previous penalties or assessments from before the current effective date.

4. An official copy of this and all policies or records shall be available during regular office hours of the Corporation. The Secretary of the Corporation shall maintain the original copy as approved and all previous copies for exhibit.

5. Rules and regulations of state or federal agencies having jurisdiction shall supersede any terms of this policy. If any section, paragraph, sentence, clause, phrase, word, or words of this policy are declared unconstitutional or invalid for any purpose, the remainder of this policy shall not be affected.

6. This tariff has been adopted (revised) in compliance in Open Meeting in compliance with the Open Meeting Act, Chapter 551 of the Texas Government Code.

PASSED and APPROVED this 10 day of October, 2005.

Roscoe Bush

Roscoe Bush
President, Pure Water Supply Corporation

SEAL

ATTEST:

Steve Hennig

Steve Hennig
Secretary, Pure Water Supply Corporation

Approved 10-10-05

Pure WSC

SECTION B.
STATEMENTS

1. ***Organization.*** The Pure Water Supply Corporation is a member-owned, non-profit corporation incorporated pursuant to the Texas Water Code Chapter 67, Nonprofit Water Supply or Sewer Service Corporations and as supplemented by the Texas Non-Profit Corporation Act, Tex. Rev. Civ. Stat. Ann., Article 1396-1.01, et seq. (West 1980, Vernon Supp. 1996 as amended) for the purpose of furnishing potable water and or sewer utility service. Corporation operating policies, rates, and regulations are adopted by the Board of Directors elected by the Members of the Corporation.

2. ***Non-Discrimination Policy.*** Membership in the Corporation and service is provided to all Applicants who comply with the provisions of this Tariff regardless of race, creed, color, national origin, sex, disability, or marital status.

3. ***Policy and Rule Application.*** These policies, rules, and regulations apply to the water and <u>or</u> sewer services provided by the Pure Water Supply Corporation, also referred to as Corporation, or (PWSC). Failure on the part of the Member, Consumer, or Applicant to observe these policies, rules and regulations gives the Corporation the authority to deny or discontinue service according to the terms of this Tariff as amended from time to time by the Board of Directors of the Corporation.

4. ***Corporation Bylaws.*** The Corporation Members have adopted bylaws (see Article 1396-2.09) which establish the make-up of the Board of Directors and other important regulations of the Corporation. The bylaws are on file at the Corporation's office.

5. ***Fire Protection Responsibility.*** The Corporation does not provide nor imply that fire protection is available on any of the distribution system. All hydrants or flush valves are for the operation and maintenance of the system and may be used for refill only by authorized fire departments. The Corporation reserves the right to remove any hydrant, due to improper use or detriment to the system as determined by the Corporation, at any time without notice, refund, or compensation to the contributors unless such hydrants are installed pursuant to the terms of a Non-Standard Service Contract as provided for in Section F, in which event the terms and conditions of the Contract shall apply.

6. ***Damage Liability.*** The PWSC is not liable for damages caused by service interruptions, events beyond its control, and for normal system failures. The limits of liability of the PWSC is the extent of the cost of service provided. By acceptance of Membership, Member consents to waiver of such liability.

7. ***Information Disclosure.*** The records of the Corporation shall be kept in the Corporation office in China Spring, Texas. All information collected, assembled, or maintained by or for the Corporation shall be disclosed to the public in accordance with the Texas Public Information Act. An individual customer may request in writing that their address, telephone number, account records, or social security number be kept confidential. Such confidentiality does not prohibit the utility from disclosing this information to an official or employee of the state or a political subdivision of the state acting in an official capacity or an employee of the Corporation acting in connection with the employee's duties. Further, such confidentiality does not prohibit the Corporation from disclosing the

C. Miller Drilling
"Water Wells Done Right"

7355 State Hwy 154 East
Winnsboro, Texas 75494

Ph. 903-725-6524 **Fax 903-725-3647**

Pure Water Supply Corp.
Well #2

April 2009

Tabor & Associates, Inc.
Johnny Tabor
254-756-2118

S

* * * * * * * COMPU-LOG - VERTICAL DEVIATION * * * * * * *

CLIENT : C.MILLER
FIELD OFFICE :
DATA FROM : N/A
MAG. DECL. : 0.000
LOG: PUREWATERSUPPLY_02-13-09_14-09_9144A_.10_-0.80_2507.70_DEVI.log

HOLE ID. : PURE WATER SU
DATE OF LOG : 02/13/09
PROBE : 9144A , 2368
DEPTH UNITS : FEET

TABLE DEPTH	TRUE DEPTH	NORTH DEV.	EAST DEV.	DISTANCE	AZIMUTH	SANG	SANGB
5.00	5.00	0.00	-0.00	0.0	279.0	0.2	279.0
200.00	200.00	0.08	0.18	0.2	64.9	0.1	74.6
400.00	400.00	0.24	0.18	0.3	36.8	0.1	357.1
600.00	600.00	0.15	0.33	0.4	66.0	0.1	84.0
800.00	799.99	-0.49	1.16	1.3	112.9	0.5	138.1
1000.00	999.99	-1.53	2.59	3.0	120.6	0.6	118.3
1200.00	1199.97	-2.80	4.27	5.1	123.2	0.5	124.4
1400.00	1399.97	-3.68	5.39	6.5	124.3	0.5	134.9
1600.00	1599.96	-4.68	6.13	7.7	127.4	0.5	163.1
1800.00	1799.96	-5.58	6.46	8.5	130.8	0.3	139.3
2000.00	1999.96	-6.38	6.56	9.2	134.2	0.3	177.2
2200.00	2199.96	-6.95	6.41	9.5	137.3	0.2	211.[illegible]
2400.00	2399.96	-7.82	6.48	10.2	140.4	0.3	175.8
2506.60	2506.55	-8.37	6.09	10.4	144.0	0.6	228.7

PLAN VIEW
COMPU-LOG DEVIATION

CLIENT: C.MILLER
LOCATION:
HOLE ID: PURE WATER SUPPLY
DATE OF LOG: 02/13/09
PROBE: 9144A 2368

MAG DECL: 0.0

SCALE: 5 FT/IN
TRUE DEPTH: 2506.55 F
AZIMUTH: 144.0
DISTANCE: 10.4 FT
+ = 300 FT INCR
= BOTTOM OF HOLE

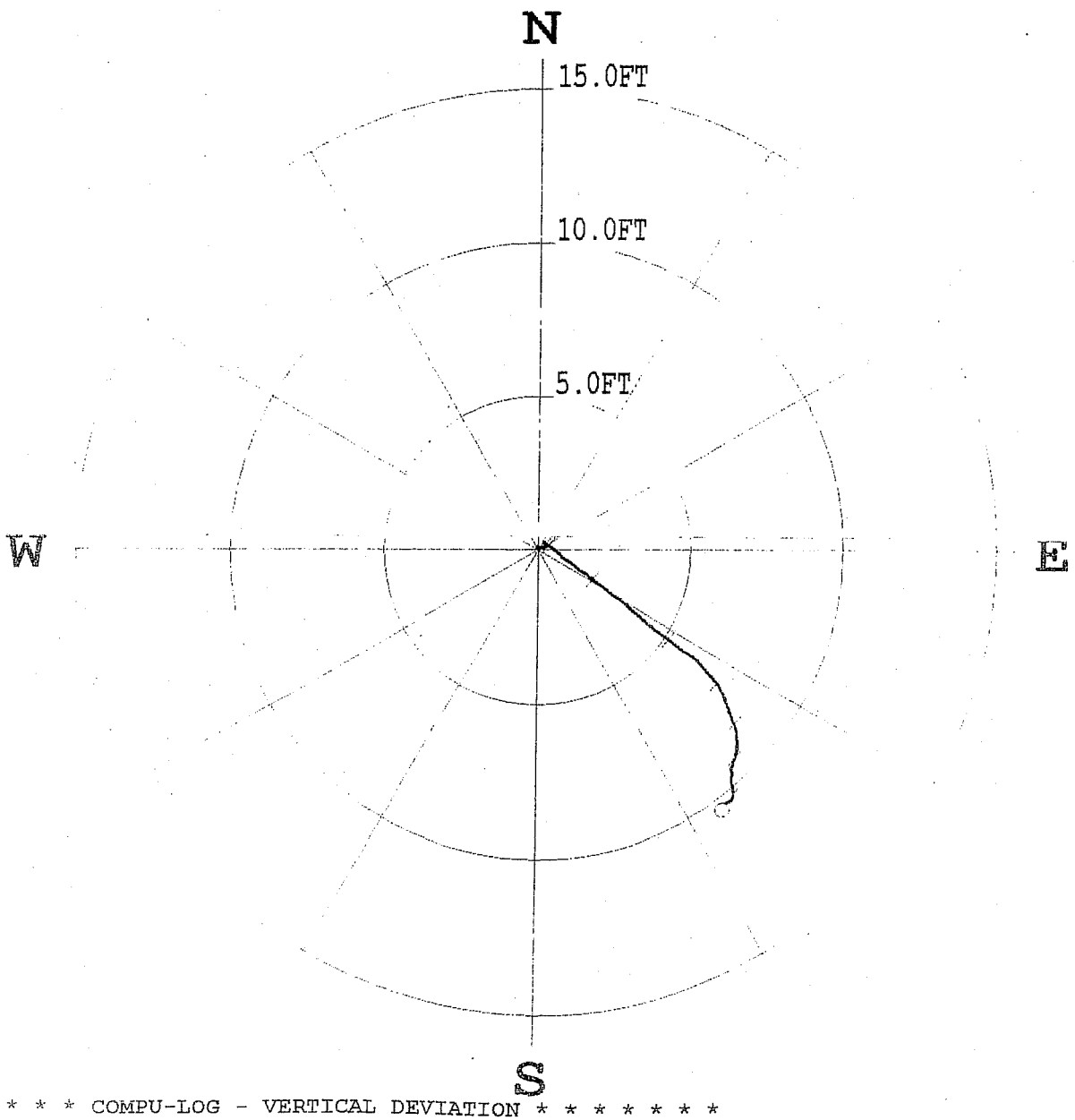

* * * * * * * COMPU-LOG - VERTICAL DEVIATION * * * * * * *

C. Miller Drilling
Gilmer, Texas
"Water Wells Done Right"
Ph. 903-725-6524
www.cmillerdrilling.com

GAMMA-SP-RES

PURE WATER SUPPLY

COMPANY	: C.MILLER	OTHER SERVICES
WELL	: PURE WATER SUPPLY	N/A
FIELD	:	N/A
COUNTY	: FREESTONE	N/A
STATE	: TEXAS	

LOCATION	: N/A
SECTION	: N/A
TOWNSHIP	: N/A
RANGE	: N/A
API NO.	: N/A
UNIQUE WELL ID.	:

PERMANENT DATUM	: GL	ELEVATION KB:	N/A
LOG MEASURED FROM:	GL	ELEVATION DF:	N/A
DRL MEASURED FROM:	GL	ELEVATION GL:	N/A

DATE	: 02/13/09
DEPTH DRILLER	: 2500
BIT SIZE	: 9.725
LOG TOP	: -0.80
LOG BOTTOM	: 2507.70
CASING OD	: N/A
CASING BOTTOM	: N/A
CASING TYPE	: N/A
BOREHOLE FLUID	: WATER
RM TEMPERATURE	: N/A
MUD RES	: N/A
MUD WEIGHT	: 9.6
WITNESSED BY	: JOHNNY JETTON
RECORDED BY	: A.WARD
REMARKS 1	:
REMARKS 2	:

Houston, Texas 77093
800-237-7593
FAX 281-442-0503

Weatherford

SAND ANALYSIS PLOT

DATE SAMPLE ANALYZED 4/01/09

JOB NAME PREFERRED PUMP

CITY _____ STATE _____

CONTRACTOR (C. MILLER) PURE

SAMPLE NO. 2075 - 2075 & No Name Sample Composite Graph

SCREEN SLOT SIZE IF GRAVEL PACKED _____

SCREEN SLOT SIZE IF NATURAL DEV. _____

GRAVEL PACK RECOMMENDED _____

US SIEVE NUMBER	SLOT SIZE IN INCHES	CUMULATIVE PERCENT RETAINED
#20	0.0834	Composite
#30	0.0234	Graph
#40	0.0166	
#50	0.0117	
#60	0.0088	
#70	0.0083	
#80	0.0070	
#100	0.0059	
#200	0.0029	
Pan	0.0001	

SO MANY CONDITIONS DEPENDING ENTER INTO THE MAKING OF A GOOD WELL THAT WHILE WE BLIEVE SLOT SIZES FURNISHED OR RECOMMENDED FROM SUBMITTED GRAD SAMPLES ARE CORRECT, WE ASSUME NO RESPONSIBILITY FOR THE SUCCESSFUL OPERATION OF ANY WELL

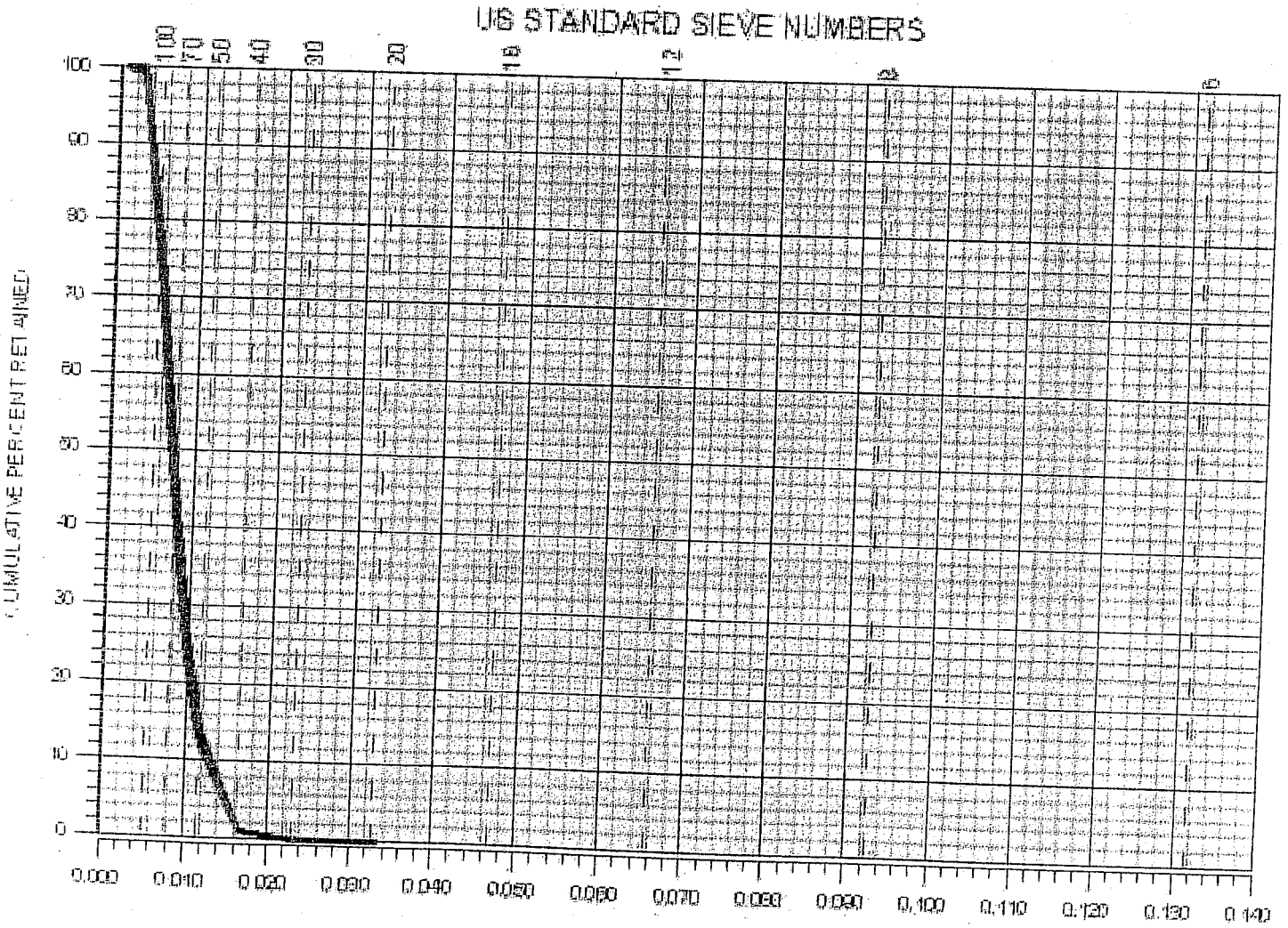

MILL TEST CERTIFICATE

Purchaser

Hall Longmore

Certificate No : HL BSP-2005418
Date : 09/09/2008
Purchase Order No : H104
Certification : EN10204-2004 3.1
HL Job No : 205452 Item: 10

Commodity : ERW PIPE MANUFACTURED IN ACCORDANCE WITH
Specification API 5L 43th Ed. 2004,XX2PSL1, ASTM A53/A-2008,ASME SA53 B-2004

HALL LONGMORE
Osborn Road,Wadeville,South Africa
Private Bag X024, Wadeville,1422
Tel: +24 11 874 7300
Fax: +27 11 824 2878
Co.Reg.No 1998/010872/07

Murray & Roberts
A Murray & Roberts Company

Dimensions	Quantity: Number of pieces	Quantity: Total Length Feet	Quantity: Mass Ton	Visual & Dimension	Hydro Test 2420 PSI	QI Flat Test	RP Flat Test	Ductility	Bend Test at Through
10.7 Inch O/D x 0.365 Inch Wall x 42 Feet Long	48	2318.000	37.157	ACCEPT.	ACCEPT.	ACCEPT.	ACCEPT.	ACCEPT.	N/A

Heat No & Coil No	C	Si	Mn	P	S	Cu	Ni	Cr	Mo	V	Al	Ti	N.D.E. UT		Tension Test (HL) YS PSI (X)	UTS PSI (X)	Elongn % 2 Inch	Hard N/A	Remarks
Chemical Analysis																			
Spec Min																			
Spec Max	0.25		1.37	0.030	0.037								ACCEPT.		42	60	27		
Y403077	0.165	0.169	1.065	0.009	0.007	0.038	0.021	0.025	0.004	0.002	0.044								
H301014	0.15	0.1056	1.09	0.035	0.009	0.03	0.02	0.03	0.01	<0.00	0.0578		H	TW		69.56			FAIST NO N/A
H302585	0.181	0.191	1.069	0.016	0.006	0.059	0.041	0.057	0.003	0	0.038		P	TS	50.176	66.616	31.84		Weld Seam and entire HAZ heat treated to as to stimulate normalizing heat treatment-Min. Temp.:1010 Deg.C and cooled in still Air.
H304474	0.18	0.1634	1.09	0.012	0.005	0.04	0.03	0.06	0.01	<0.00	0.0439		H	TW		78.693			
H302604	0.169	0.154	1.055	0.013	0.005	0.042	0.025	0.03	0.004	0.004	0.049		P	TS	52.321	65.238	32.25		
H301103	0.15	0.1963	1.13	0.011	0.002	0.04	0.02	0.03	0.01	<0.00	0.0452		H	TW		69.924			
													P	TS	56.069	66.522	31.85		

QUALITY MANAGER

H-Heat Analysis, P-Product Analysis, Ts-Transverse Stock, TW-Transverse Weld.

Reviewed by C. Miller Drilling

SHOP DRAWING REVIEW
SUBJECT TO ALL CONDITIONS OF CONTRACT DOCUMENTS.

- [x] APPROVED
- [ ] APPROVED AS NOTED
- [ ] DISAPPROVED

TABOR & ASSOCIATES, INC.

DATE 11/7/08

P. 002/002

OCT-31-2008(FRI) 11:13

SHOP DRAWING REVIEW

SUBJECT TO ALL CONDITIONS
CONTRACT DOCUMENTS,

☒ APPROVED
☐ APPROVED AS NOTED
☐ DISAPPROVED

TABOR & ASSOCIATES, INC.

DATE 11/06/0

6-5/8" X .250 X 40.17

本溪北方钢管有限公司
Benxi Northern Steel Pipes Co.,Ltd

北 白

产品质量证明书
MILL TEST CERTIFICATE

本溪北方钢管有限公司 质量专用章

API MONOGRAM

API License No.: 5L-0474

兹为你单位制造之钢管,业经本公司质检中心依据标准、技术条件、合同检验合格。特发此证。

This is to certify that in accordance with the relevant specifications and contracts.

The BLACK PLAIN END LINE PIPE manufactured were tested and qualified by our Quality Control Department.

Add:NO.138 Yuming Road Mingshan District, Benxi City, Liaoning Province,China

订货单位
Consumer

SUNBELT GROUP LP.
1990 POST OAK BLVD.,NO.950,HOUSTON,TX
77056-3817

质检字
Q.T.No 080501-2

到 港: Houston

Standard API 5LB

检查依据 API 5LB
The BLACK PLAIN END LINE PIPE are tested according to API 5LB

按理论 合计 990 支 39785 英尺 747,943.51 磅
and counted nominally
amount 990 pcs 39785 ft 747,943.51 Pounds

产品批号 Batch No.	炉号 Heat No.	钢级 Steel Grade	产品规格(Size) OD in	WT in	L ft	数量 Quantity 根(Pcs)	英尺(ft)	磅(Pound)	外观尺寸 Surface Dimension	管坯化学成分(%) Pipe Chemical Composition C	Si	Mn	P	S	管坯物理性能 Pipe Mechanical Properties σ_s (Psi) YIELD STRENGTH	σ_b (Psi) TENSILE STRENGTH	δ5 (%) ELONGATION	焊缝物理性能 Weld properties σ_b (Psi) TENSILE STRENGTH	水压试验 Hydrostatic Test Holding time:10s P =PSI		超声波探伤 UT	压扁试验 Flattening Test
										$\times 10^{-2}$												
1	842909	B	10-3/4	0.250	40' 2"	120	4820	135,249.20	OK	16	22	46	2.5	2.8	42050	61625	31.5	OK	960	OK	OK	OK
2	81-03255	B	8-5/8	0.250	40' 2"	220	8836' 8"	167,808.36	OK	13	20	47	2.7	2.8	42775	60900	31.0	OK	1780	OK	OK	OK
3	82-03035	B	6-5/8	0.250	40' 2"	650	26108' 4"	444,885.94	OK	14	16	49	2.9	2.8	42050	61625	31.5	OK	1580	OK	OK	OK
	以下空白																					
合 计						990	39785	747,943.51														

HEAT NUMBER MATCHING HEAT NO. ON PIPE

QA 负责人: 姜殿东
QA MANAGER

QA: 马志平
QA INSPECTOR

日期: 01-May-08
Delivery date:

Reviewed by
C. Miller Drilling

第 1 页, 共 1 页

PURE WATER SUPPLY CORPORATION
3/19/09

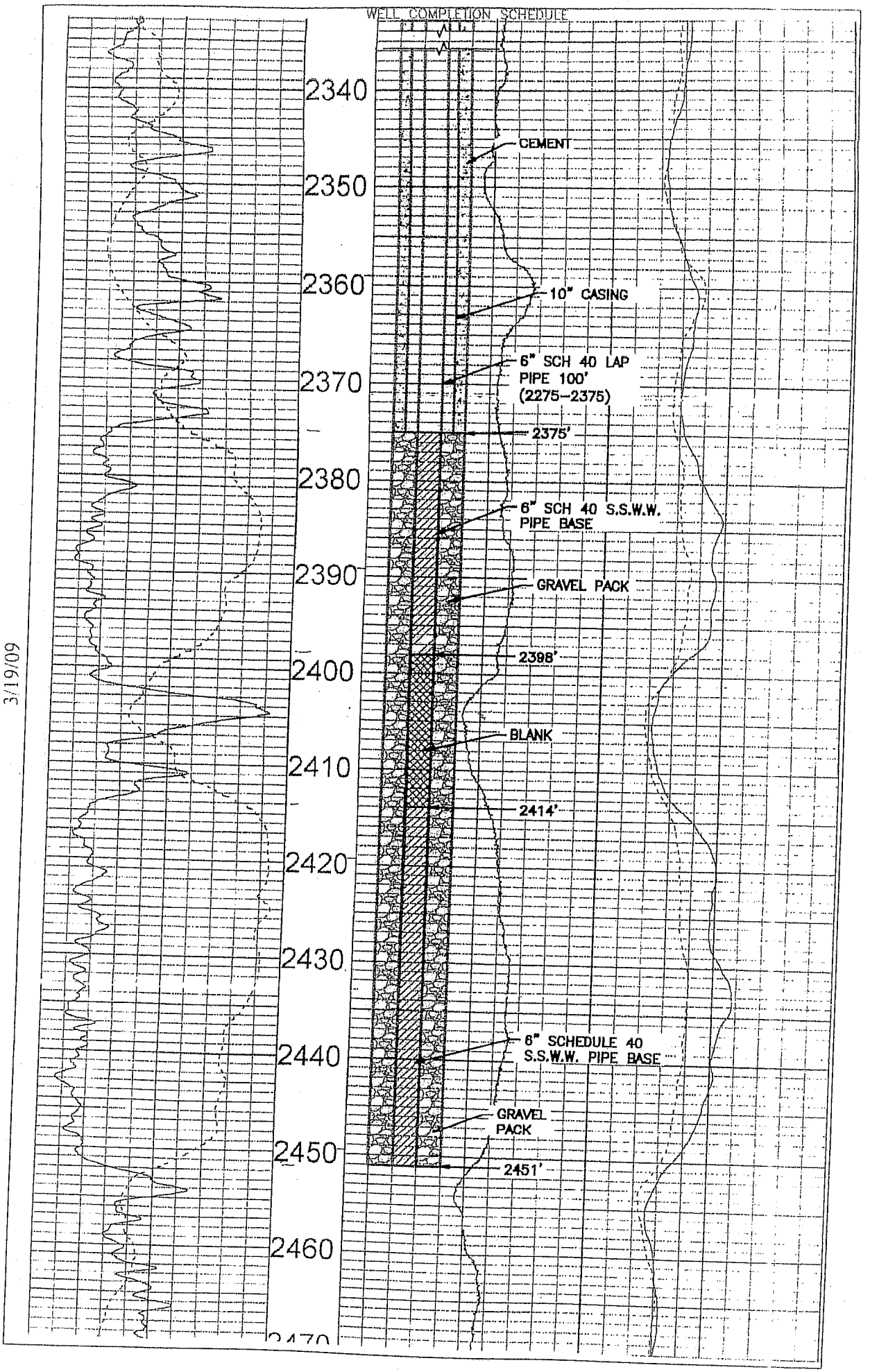

BASIC ENERGY SERVICES

Field Receipt

Customer:	C Miller Drilling	Pump TRK No.:	19712/Justin	Operator TRK No.:	19703/Brady
Address:		AFE No.:	19576/Johnny	Bulk TRK No.:	19717/Justin 19706/Jason
City, State, Zip:		Job Type:	Production String		
Service District:	Gainesville, Texas	Well Type:	Water Well		
Well Name and No.:	Pure Water Supply	Well Location:	Waco	County: McLellan	State: TX

Product Code	Description	Unit of Measure	Quanity	List Price/Unit	Gross Amount	Item Discount	Net Amount
CE203	Depth Charge; 2001'-3000'	4hrs	1	$1,800.00	$1,800.00	38.00%	$1,116.00
CE240	Blending & Mixing Service Charge	sk	975	$1.40	$1,365.00	38.00%	$846.30
CE504	Plug Container Utilization Charge	job	1	$250.00	$250.00	38.00%	$155.00
CCT106	Lite Cement with Class C	sk	975	$21.00	$20,475.00	38.00%	$12,694.50
CF107	Top Rubber Cement Plug, 10 3/4"	ea	1	$350.00	$350.00	38.00%	$217.00
E100	Unit Mileage Charge-Pickups, Small Vans & Cars (one way)	mi	75	$4.25	$318.75	38.00%	$197.63
E101	Heavy Equipment Mileage	mi	75	$7.00	$525.00	38.00%	$325.50
E119	Enviromental Surcharge	Job	1	$100.00	$100.00	38.00%	$62.00
S001	Senior Supervisor	day	1	$250.00	$250.00	38.00%	$155.00
				Gross	$25,433.75	Net	$15,768.93

TERMS: Cash in advance unless Basic Energy Services has approved credit prior to sale. Credit terms of sale for approved accounts are total invoice due on or before the 30th day from the date of invoice. Past due accounts may pay interest on the balance past due at the rate of 1 ½% per month or the maximum allowable by applicable state or federal laws if such laws limit interest to a lesser amount. In the event it is necessary to employ an agency and/or attorney to affect the collection of said account, Customer hereby agrees to pay all fees directly or indirectly incurred for such collection. In the event that Customer's account with BES becomes delinquent, BES has the right to revoke any and all discounts previously applied in arriving at net invoice price. Upon revocation, the full invoice price without discount will become immediately due and owing and subject to collection.

CUSTOMER AUTHORIZED AGENT

Customer Represetative: John Phillips

Basic Representative: Brady Rusk

Date of Service: March 31, 2009

SERVICE ORDER: I AUTHORIZE WORK TO BEGIN PER SERVICE INSTRUCTIONS IN ACCORDANCE WITH TERMS AND CONDITIONS (INCLUDING INDEMNIFICATION OBLIGATIONS) LISTED HERE OR IN THE CUSTOMER CONTRACT FORM AND REPRESENT THAT I HAVE AUTHORITY TO ACCEPT AND SIGN THIS ORDER.

Customer Comments or Concerns:

Basic Energy Services appreciates any Comments, Concerns or Critisism's from our valuble customers as Safety and Customer Satisfaction are our Number 1 goal. All Comments are confidential and will be used in a constructive manner to improve our Safety and Job Performance. We welcome them as a useful tool to improve upon our service.....

STATE OF TEXAS WELL REPORT for Tracking #176489

Owner:	**Pure WSC**	Owner Well #:	2
Address:	**PO Box 154414** **Waco , TX 76705**	Grid #:	40-24-8
Well Location:	**Oak Knoll Ln** **Elm Mott , TX 76640**	Latitude:	31° 39' 28" N
Well County:	**McLennan**	Longitude:	097° 03' 47" W
Elevation:	**No Data**	GPS Brand Used:	**Garmin**
Type of Work:	**New Well**	Proposed Use:	**Public Supply; Plans Approved by TCEQ**

Drilling Date: Started: **1/14/2009**
Completed: **4/21/2009**

Diameter of Hole: Diameter: **14 3/4 in From Surface To 2475 ft**
Diameter: **9 7/8 in From 2475 ft To 2507 ft**

Drilling Method: **Mud Rotary**

Borehole Completion: **Straight Wall**

Annular Seal Data: 1st Interval: **From 0 ft to 2373 ft with 1,070 cement (#sacks and material)**
2nd Interval: **No Data**
3rd Interval: **No Data**
Method Used: **Halliburton Style**
Cemented By: **Basic Energy Services**
Distance to Septic Field or other Concentrated Contamination: **150+ ft**
Distance to Property Line: **50+ ft**
Method of Verification: **Driller/Owner**
Approved by Variance: **No Data**

Surface Completion: **Surface Slab Installed**

Water Level: Static level: **742 ft. below land surface on 4/22/2009**
Artesian flow: **No Data**

Packers: **10 x 16 2373**
10 x 16 2372

Plugging Info: Casing or Cement/Bentonite left in well: **No Data**

Type Of Pump: **Submersible**
Depth to pump bowl: **987 ft**

Well Tests: **Pump \ Jetted**
Yield: **281 GPM with 232 ft drawdown after 36 hours**

Water Quality: Type of Water: **Potable**
Depth of Strata: **No Data**
Chemical Analysis Made: **Yes**
Did the driller knowingly penetrate any strata which contained undesirable constituents: **No**

Certification Data: The driller certified that the driller drilled this well (or the well was drilled under the driller's direct

supervision) and that each and all of the statements herein are true and correct. The driller understood that failure to complete the required items will result in the log(s) being returned for completion and resubmittal.

Company Information:	**C. Miller Drilling** **7355 E SH 154** **Winnsboro , TX 75494**
Driller License Number:	**2464**
Licensed Well Driller Signature:	**Cory L Miller, 2464**
Registered Driller Apprentice Signature:	**No Data**
Apprentice Registration Number:	**No Data**
Comments:	**No Data**

IMPORTANT NOTICE FOR PERSONS HAVING WELLS DRILLED CONCERNING CONFIDENTIALITY

TEX. OCC. CODE Title 12, Chapter 1901.251, authorizes the owner (owner or the person for whom the well was drilled) to keep information in Well Reports confidential. The Department shall hold the contents of the well log confidential and not a matter of public record if it receives, by certified mail, a written request to do so from the owner.

Please include the report's Tracking number (Tracking **#176489**) on your written request.

Texas Department of Licensing & Regulation
P.O. Box 12157
Austin, TX 78711
(512) 463-7880

DESC. & COLOR OF FORMATION MATERIAL

From (ft)	To (ft)	Description
0	36	Tand clay w/gravel mix
36	250	Shale
250	510	Limestone
510	600	Shale w/limestone
600	730	Limestone
730	840	Harder limestone
840	884	Limestone
884	1385	Harder limestone
1385	1390	Limestone
1390	1490	Hard limestone
1490	1590	Shale
1590	1646	Harder limestone
1646	2065	Limestone
2065	2100	Limestone w/sand strks.
2100	2130	Soft limestone
2130	2145	Limestone w/sand
2145	2260	Hard limestone w/sand strks.
2260	2310	Limestone and shale w/sand strks.
2310	2370	Sand w/shale strks.
2370	2400	Sand
2400	2415	Shale w/sand strks.

CASING, BLANK PIPE & WELL SCREEN DATA

Dia.	New/Used	Type	Setting From/To
10 3/4	OD N	Steel Casing	0 2373
6 5/8	OD N	Steel Lap Pipe	2250 2376
6 5/8	OD N	Stainless Steel Screen	2376 2452 .016
6 5/8	OD N	Steel Pipe	2452 2458

2415 2455 Sand
2455 2488 Shale w/sand strks.
2488 2494 Red bed w/sand strks.
2494 2507 Red bed

C. Miller Drilling

7355 East SH 154 Winnsboro, TX. 75494 Tel. (903) 725-6524

WELL LOG and MATERIAL REPORT

Customer: Pure WSC
Address: P.O. Box 154414, Waco, TX 76705
Location: N. 31* - 39' - 28", W. 97* - 03' - 47"

Well No.: 2
Contract No.: Pure # 2
Completed: 1/14/09 to 4/21/09

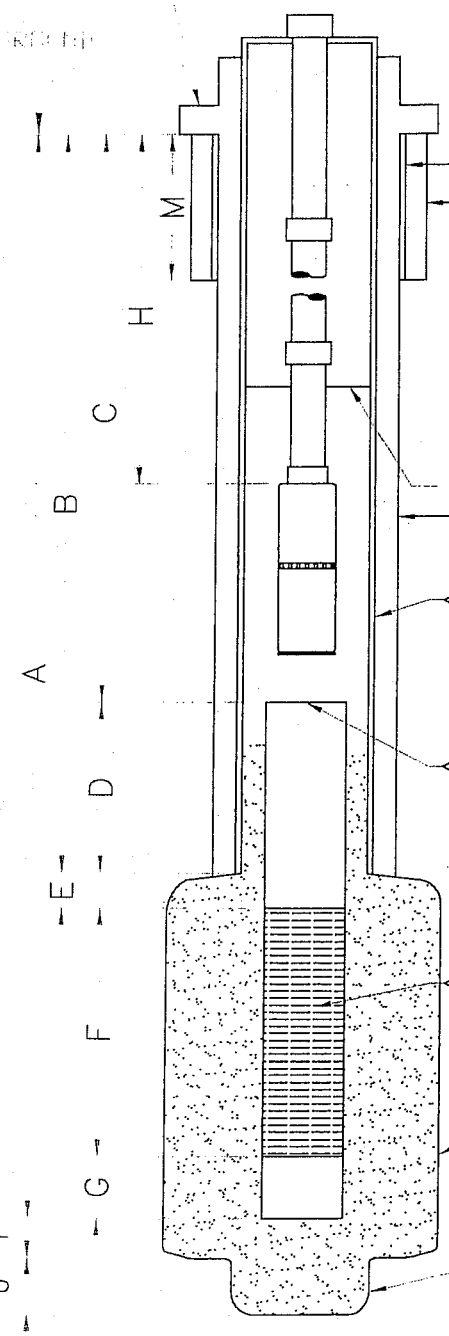

Dimensions:

A—	2458'
B—	2373'
C—	2250'
D—	123'
E—	3'
F—	76'
G—	4'
H—	984'
I—	2475'
J—	2507'
K—	N/A
L—	N/A
M—	N/A
N—	14.75"
O—	14.75"
P—	9.875"
Q—	742'

Q (Static level)

Size	10.75" O.D.
Weight	40.48#
Wall	.365"

Size	6.625" O.D.
Weight	Sch. 40
Wall	.280"
Material	Steel

Size	6.625" O.D.
Type	PBWW
Gauge	Sch. 40
Slot	.016"
Base Matl.	Steel
Wire Matl.	304 S.S.

PUMP DATA:
Brand: Franklin Model: See below Stages: 9
Discharge Column—Pipe Size 4.5" Depth: 987'
Design Conditions: 300 USGPM 926.6' TDH

MOTOR DATA:
HP: 100 - 3 ph. Make: Franklin Speed: 3450 rpm
Voltage: 460 V. Frame: Type: Sub
Serial Number: 09D19155065

REMARKS: Tabor & Associates
Pump model # 275ST100D8X-0984
(2) airlines at 981' from ground surface

FORMATION LOG:

FROM	TO	MATERIAL
0	36	Tan clay w/gravel mix
36	250	Shale
250	510	Limestone
510	600	Shale w/limestone
600	1490	Limestone
1490	1590	Shale
1590	2065	Limestone
2065	2100	Limestone w/sand strks
2100	2130	Soft limestone
2130	2145	Limestone w/sand
2145	2260	Hard limestone w/sand strks
2260	2310	Limestone w/shale & sand strks
2310	2370	Sand w/shale strks
2370	2400	Sand
2400	2415	Shale w/sand strks
2415	2455	Sand
2455	2488	Shale w/sand strks
2488	2494	Red bed w/sand strks
2494	2507	Red bed

Note: 6.626" blank from 2399' to 2415'

C. Miller Drilling
Pump Set and New Well Completion

Name of Owner: Pure WSC Date Set: 4/22/2009

Address: _____ City: _____ TX _____

Well Information:

Surface Completion: ✓* Slab, _____ Sleeve Pipe, Sleeve Pipe Size: _____

Static Level of Water: 742'6" Jetting Info: _____ @ _____ _____ @ _____

Pump Set Information:

Horsepower Rating: 100 Pump Make and Model: Franklin 275ST1000X

Pump Serial Number: 15-5065 Motor Serial Date: 09 D 19

Well Depth: 2500'+ Pump Setting: 987 Wire Size: 2/0

Hangpipe: ___Sch-80 PVC, ___Coil Pipe, ___Galv. Pipe Size of Pipe: 4" Black Steel

Tank(s): ___ Air Volume, ___Bladder, Number of Tanks: ____ Size: _____ gallons

Installer: Kenny / Billy Helper: Lagnat, Anthony, Drew, Acklam

Other Information:

* To be done by others
* Check Valves 1 up, 4 up, 8 up from pump
* Airline 984' from Well Seal
* Stainless Steel Bands every 10' Tapes every 50'

C. Miller Drilling
7355 State Hwy 155 East
Winnsboro, Texas 75494

Draw down data and production report

Client: Pure WSC
Tabor Eng.

Date(s): 4-22-09 / 4-24-09
Location: New well
Recorded by: Billy / Darren

Static Water Level 742'6" from well Seal

Time	GPM	Water level	Time	GPM	Water level
7:00A	∅	742'6"	Noon	285	968'1"
7:00	315	867'1"	1:00P	285	968'3"
7:05	307	908'4"	2:00	284	968'9"
7:10	306	927'1"	3:00	284	969'2"
7:15	298	928'8"	4:00	283	969'4"
7:20	297	931'8"	5:00	↓	969'9"
7:25	295	934'0"	6:00	283	970'5"
7:30	295	936'3"	7:00	282	970'7"
7:35	294	937'7"	8:00	↓	971'0"
7:40	↓	939'2"	9:00	↓	971'6"
7:45	↓	940'7"	10:00	↓	972'2"
7:50	↓	941'6"	11:00	↓	972'4"
7:55	294	942'6"	Mid	↓	972'8"
8:00	291	942'9"	1:00	282	973'0"
8:30	↓	946'7"	2:00	281	973'4"
9:00	291	949'4"	3:00	↓	973'6"
9:30	290	951'2"	4:00	↓	973'8"
10:00	↓	952'9"	5:00	↓	974'1"
10:30	↓	954'5"	6:00	↓	974'3"
11:00	290	955'4"	7:00	281	974'5"
Mid	289	957'4"			
1:00	288	959'0"			
2:00	288	960'3"			
3:00	287	961'5"			
4:00	↓	962'6"			
5:00	↓	963'7"			
6:00	287	964'6"			
7:00	286	965'5"			
8:00	286	965'8"			
9:00	285	966'5"			
10:00	285	967'0"			
11:00	285	967'5"			

C. Miller Drilling
7355 State Hwy 155 East
Winnsboro, Texas 75494

Draw down data and production report

Client: Pure WSC
Tabor Eng.

Date(s): 4-22-09 / 4-24-09
Location: New Well
Recorded by: Billy / Darren

Recovery

Time	GPM	Water level	Time	GPM	Water level
7:00AM	281	974' 5"			
	well -	off			
7:01	Ø	847' 4"			
7:10		803' 0"			
7:20		791' 4"			
7:30		786' 2"			
7:40		782' 3"			
7:50		779' 5"			
8:00		778' 0"			
8:10		776' 4"			
8:20		774' 7"			
8:30		773' 6"			
8:40		772' 4"			
8:50		771' 4"			
9:00		770' 8"			
9:10		770' 1"			
9:20		769' 3"			
9:30		768' 7"			
9:40		768' 3"			
9:50		767' 8"			
10:00		767' 1"			
10:10		766' 9"			
10:20		766' 3"			
10:30		765' 9"			
10:40		765' 6"			
10:50	✓	765' 2"			
11:00	Ø	764' 8"			
11:10	Ø	764' 4"			

GW 1

TEXAS WATER DEVELOPMENT BOARD

WELL SCHEDULE

Aquifer: Trinity Hosston

Elev. Finish No. JS-ST-56

Owner's Well No. #1

State Well No. 40-24-501

County McLennan

1. Location: 1/4, 1/4 Sec., Block, Survey
1 mile ESE Elm Mott
2. Owner: Pure Water Supply Corp. Address: Waco
Tenant: Address:
Driller: C.M. Stoner Drilling Co. Address: Rt 4 Cleburne Tex
3. Elevation of LSD is 483 ft. above msl, determined by Topo Map
4. Drilled 4-4 19 67; Dug, Cable Tool, Rotary
5. Depth: Rept. ft. Meas. 2414 ft.
6. Completion: Open Hole, Straight Wall, Underreamed, Gravel Packed
7. Pump: Mfgr. Type Submersible
No. Stages, Bowls Diam. in., Setting ft.
Column Diam. in., Length Tailpipe ft.
8. Motor: Fuel Electric Make & Model HP
9. Yield: Flow gpm, Pump gpm, Meas., Rept., Est.
10. Performance Tests: Date 4-67 Length of Test 36 hrs Made by
Static Level 245 ft. Pumping Level 374 ft. Drawdown ft.
Production 108 gpm Specific Capacity 108 gpm/ft.
11. Water Level: 50.75 ft. Rept. Meas. 19 April 1967 above below M.P. (Top of Csg. Cover-Where E-lines enter Well) which is 1.5 ft. above below surface.
ft. Rept. Meas. 19 above below which is ft. above below surface.
ft. Rept. Meas. 19 above below which is ft. above below surface.
ft. Rept. Meas. 19 above below which is ft. above below surface.
12. Use: Dom., Stock, Public Supply, Ind., Irr., Waterflooding, Observation, Not Used.
13. Quality: (Remarks on taste, odor, color, etc.)
Back Temp. °F, Date sampled for analysis ? Laboratory TSHD
Temp. °F, Date sampled for analysis 1-72 Laboratory TSHD
Temp. °F, Date sampled for analysis Laboratory
14. Other data available as circled: Driller's Log, Radioactivity Log, Electric Log, JT-56
Formation Sampled, Pumping Test.
15. Recorded by: W.B. Klemt TWDB Date 19 April 1967
Source of Data
16. Remarks: Engr - Sayles

CASING & BLANK PIPE

Cemented From ft. to ft.

Diam. (in.)	Type	Setting, ft. from	to
7"		0	2414

WELL SCREEN

Screen Openings

Diam. (in.)	Type	Setting, ft. from	to
7"	Mill Slotted	2318	2772

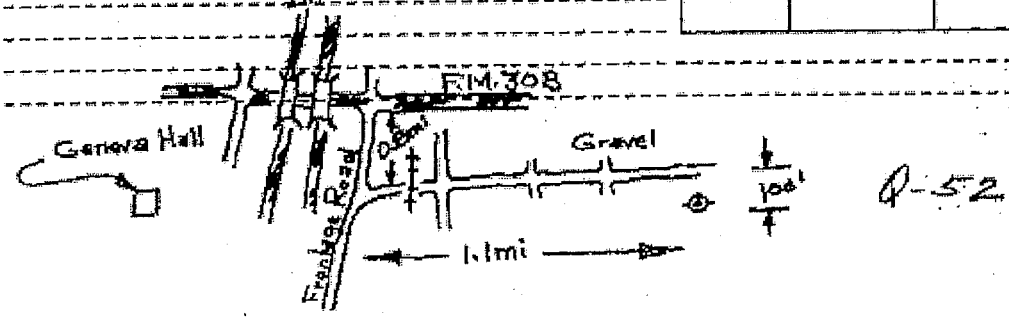

(Sketch)

40-24-501

C. M. Stoner
Rt. 4 Box 157
Cleburne, Texas 76031

DRILLERS LOG

WELL OWNER: Pure Water Supply Corporation No 1
WELL LOCATION: Elm Mott, Texas
WELL DRILLED BY: C. M. Stoner Drilling Co.
WELL COMPLETED: April 1967

DEPTH OF STRATA	THICKNESS	FORMATION
0 - 1	1'	soil
1 - 16	15	clay
16 - 20	4	gravel
20 - 110	90	blue shale
110 - 380	270	chalk
380 - 500	120	blue shale
500 - 770	270	brown shale
770 - 1980	1210	white rock
1980 - 2000	20	sandy shale
2000 - 2050	50	lime
2050 - 2080	30	sand
2080 - 2135	55	shell
2135 - 2335	200	sand
2335 - 2414	79	broken sand & shell

PRODUCTION TEST
for
PURE WATER SUPPLY CORPORATION
April 1967

TEST CONDUCTED BY: C. M. Stoner
WELL OWNER: Pure Water Supply Corporation
PUMPED WELL NO: 1
LOCATION: 1½ miles So. Elm Mott, Texas
AIRLINE LENGTHS: 504' STATIC LEVEL 245'
PUMP SETTING: 504'

DATE & TIME	ORIFICE READING	PUMPING RATE GPM	SUBMERGENCE OF PUMP	FEET TO WATER	REMARKS
5 - 2 - 1967					
8:10 A.M.	18"	108	110'	394'	Start of test
8:30	18"	108	115	389	
9:00	18"	108	111	393	
10:00	18"	108	112	392	
11:00	18"	108	112	392	
12:00	18¼"	108	113	391	
5 - 3 - 1967					
1:00 P. M.	18¼"	108	114	390	
2:00	18¼"	108	115	389	
3:00	18¼"	108	116	388	
4:00	18¼"	108	117	387	
5:00	18¼"	108	118	386	
6:00	18½"	108	119	385	
7:00	18½"	108	120	384	
8:00	18½"	108	121	383	
9:00	18½"	108	125	379	
10:00	18½"	108	125	379	
11:00	18½"	108	125	379	
12:00	18 3/4"	108	127	377	
1:00 A. M.	18 3/4"	108	129	375	
2:00	19"	108	130	374	
3:00	19"	108	132	372	
4:00	19¼"	108	132	372	
5:00	19½"	108	132	372	
6:00	19½"	108	132	372	
7:00	19½"	108	132	372	
8:00	19½"	108	130	374	
9:00	19½"	108	130	374	
10:00	19½"	108	130	374	
11:00	19½"	108	130	374	
12:00	19½"	108	130	374	

PUMP RECORD

PRODUCTION TEST
for
PURE WATER SUPPLY CORPORATION
April 1967

DATE & TIME	ORIFICE READING	PUMPING RATE GPM	SUBMERGENCE OF PUMP	FEET TO WATER	REMARKS
5 - 4 - 1967					
1:00	19½"	108			
2:00	19½	108	130	374	
3:00	19½	108	130	374	
4:00	19½	108	130	374	
5:00	19½	108	130	374	
6:00	19½	108	130	374	
7:00	19½	108	130	374	

PUMP RECORD

PRODUCTION TEST
for
PURE WATER SUPPLY CORPORATION
April 1967

ATE & IME	ORIFICE READING	PUMPING RATE GPM	SUBMERGENCE OF PUMP	FEET TO WATER	REMARKS
- 4 - 1967					
:00	19½"	108	130	374	
:00	19½	108	130	374	
:00	19½	108	130	374	
:00	19½	108	130	374	
:00	19½	108	130	374	
:00	19½	108	130	374	
:00	19½	108	130	374	
:00	19½	108	130	374	

PUMP RECORD